Formulate:
Essential 10’ Straight Wall

Total Graphic Area: 125”w X 94.5”h
Total Visual Area: 121”w X 90.5”h

Please be sure to include the 2” bleed around the perimeter (note trim & stitch locations on template). DO NOT design any critical elements (text, logos, etc.) within 2” of the edge.

General Art Guidelines:

- CMYK Color Mode
- All Solid Coated Pantone colors should be called out in the art as spot colors
- Embed all images and support files
- Resolution must be 100-120 ppi
- All fonts must be created to outlines
- Do not scale artboard
- Background color/images must bleed to the edge of artboard
- Do not use spot colors from template in your artwork as they will not print

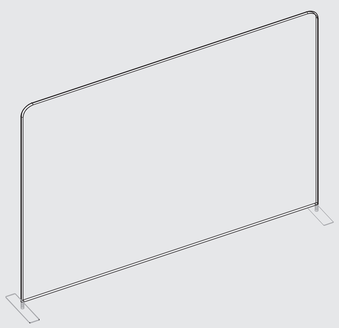

bleed area
trim line
safe zone

Formulate:
Essential Straight Banner 1200

Total Graphic Area: 51.25”w X 95.625”h
Total Visual Area: 47.25”w X 91.625”h

Please be sure to include the 2“ bleed around the perimeter (note trim & stitch locations on template). DO NOT design any critical elements (text, logos, etc.) within 2” of the edge.

General Art Guidelines:

– CMYK Color Mode

– All Solid Coated Pantone colors should be called out in the art as spot colors

– Embed all images and support files

– Resolution must be 100-120 ppi

– All fonts must be created to outlines

– Do not scale artboard

– Background color/images must bleed to the edge of artboard

– Do not use spot colors from template in your artwork as they will not print

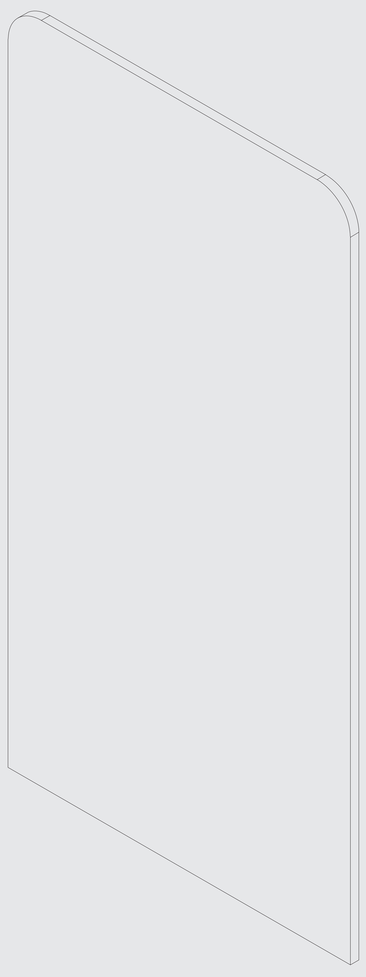

bleed area
trim line
safe zone

Formulate:
Essential 10’ Straight Wall

Total Graphic Area: 125”w X 94.5”h
Total Visual Area: 121”w X 90.5”h

Please be sure to include the 2” bleed around the perimeter (note trim & stitch locations on template). DO NOT design any critical elements (text, logos, etc.) within 2” of the edge.

General Art Guidelines:

- CMYK Color Mode
- All Solid Coated Pantone colors should be called out in the art as spot colors
- Embed all images and support files
- Resolution must be 100-120 ppi
- All fonts must be created to outlines
- Do not scale artboard
- Background color/images must bleed to the edge of artboard
- Do not use spot colors from template in your artwork as they will not print

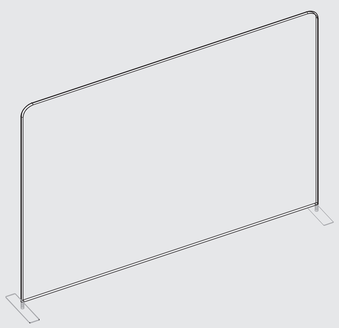

bleed area
trim line
safe zone